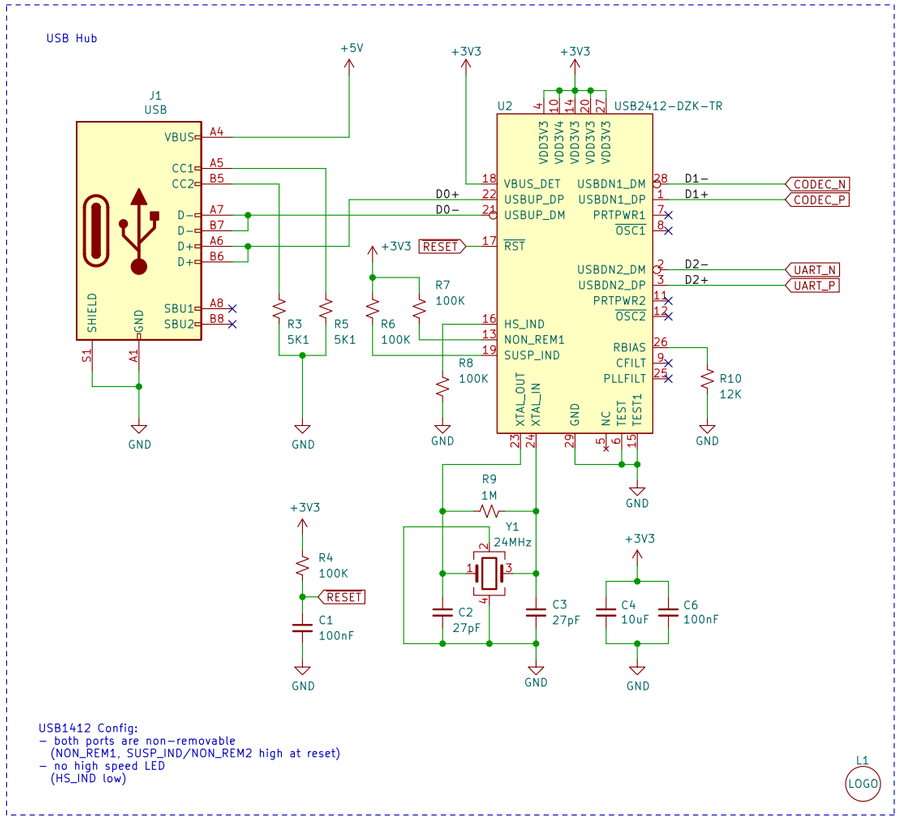

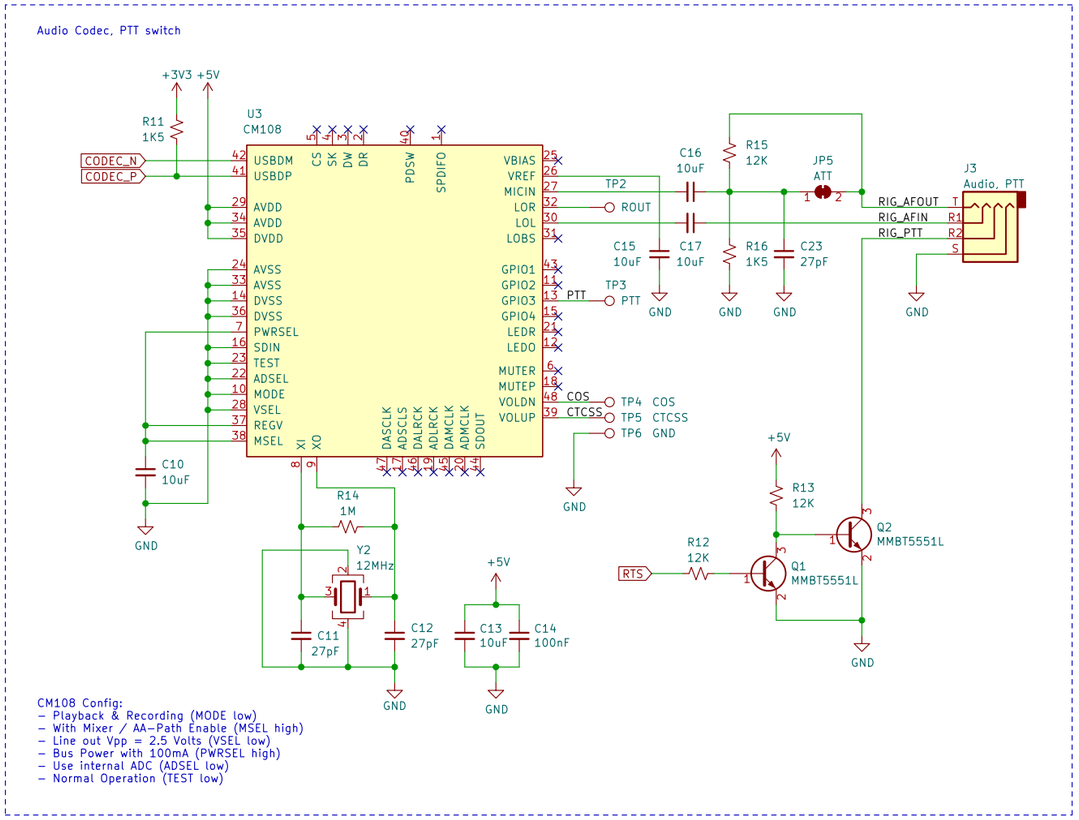

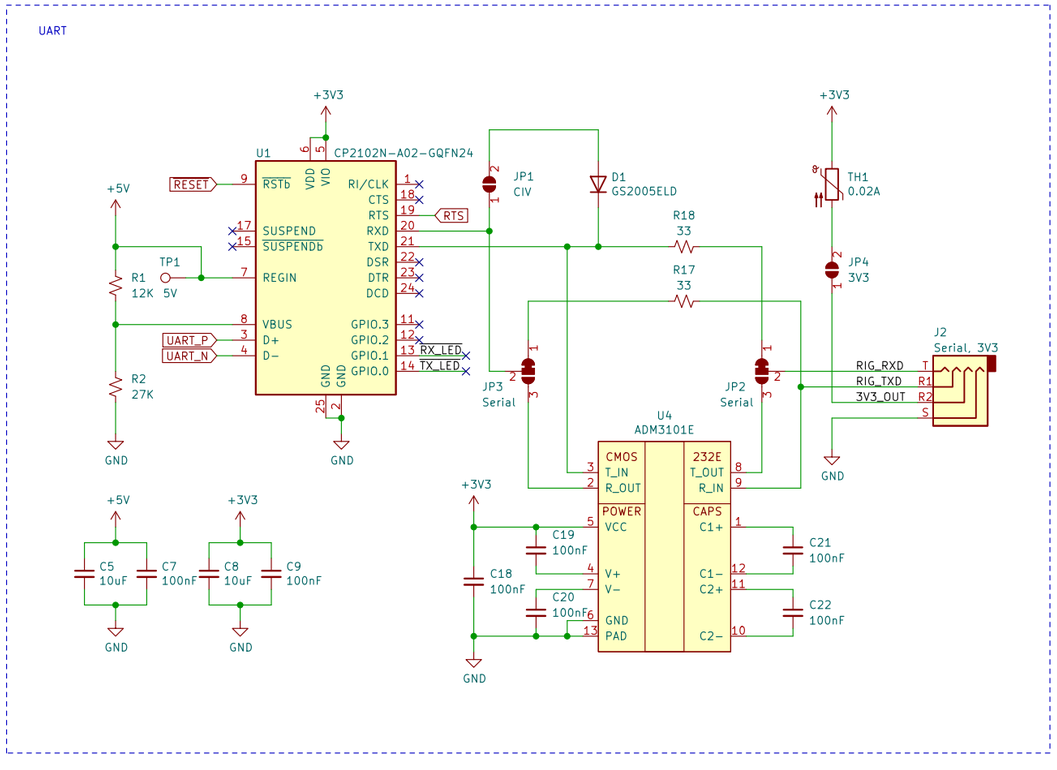

https://digirig.net/

GNU General Public License v3.0

Denis Grisak – K0TX
Softcomplex, Inc

Sheet: /
File: digirig-mobile.kicad_sch

Title: Digirig Mobile

Size: A3	Date:	**Rev: 1.8**
KiCad E.D.A. kicad (6.0.0)		Id: 1/1